अंतर - विश्वविद्यालय त्वरक केंद्र
INTER-UNIVERSITY ACCELERATOR CENTRE
(विश्वविद्यालय अनुदान आयोग का स्वायत्त निकाय)
(An Autonomous C–entre of UGC)
अरुणा आसफ अली मार्ग, नई दिल्ली - 110067
Aruna Asaf Ali Marg, New Delhi - 110067

ई-निविदा आमंत्रण सूचना / NOTICE INVITING E-TENDER

निविदा संख्या: IUAC/NIT/15/HS /2026-27 **दिनांक: 26/11/2026**

Tender Number: IUAC/NIT/15/HS/2026-27 **Dated: 26/11/2026**

(अंतर-विश्विधालय त्वरककेंद्र (आईयूएसी) निदेशक आईयूएसी, नई दिल्ली की ओर से दो बोली प्रणाली के तहत ई-प्रोक्योरमेंट पोर्टल के माध्यम से ऑनलाइन बोलियां आमंत्रित करता है, अर्थात तकनीकी और वित्तीय बोलियां, के लिए पात्र/अनुभवी पार्टियों से आईयूएसी कैंपस, नई दिल्ली में "**डाइल्यूशन रेफ्रिजरेटर के लिए गैस मैनेजमेंट सिस्टम (GMS) की आपूर्ति**"

Inter - University Accelerator Centre (IUAC) invites online bids on behalf of the Director IUAC, New Delhi through e-procurement Portal under two bid system, viz., Technical and Financial bids, from eligible / experienced parties for the "Supply of Gas Management System (GMS) for Dilution Refrigerator" at IUAC, New Delhi.

निविदा दस्तावेज, सेंट्रल पब्लिक प्रोक्योरमेंट (सीपीपी) पोर्टल https://eprocure.gov.in/eprocure/app से मुफ्त में डाउनलोड किए जा सकते हैं। इच्छुक बोलीदाता, जिन्होंने ई-प्रोक्योरमेंट पोर्टल में नामांकन/पंजीकरण नहीं किया है, उन्हें भाग लेने से पहले https://eprocure.gov.in/eprocure/app वेबसाइट के माध्यम से नामांकन/पंजीकरण करना होगा। बोलियां केवल https://eprocure.gov.in/eprocure/app वेबसाइट पर ऑनलाइन जमा करनी होगी। निविदाकारों/ठेकेदारों/बोलीदाताओं को सलाह दी जाती है कि वे ई-प्रोक्योरमेंट पोर्टल में दिए गए निर्देशों का पालन करें। बोली दस्तावेजों को 100 डी.पी.आई. में ब्लैक एंड व्हाइट स्कैन करें, जो स्कैन किए गए दस्तावेजों के आकार को कम करने में मदद करता है।

Tender Documents may be downloaded from Central Public Procurement (CPP) Portal free of cost https://eprocure.gov.in/eprocure/app. Aspiring Bidders who have not enrolled/registered in e-procurement portal should enroll/register before participating through the website https**://eprocure.gov.in/eprocure/app**. Bids should be submitted online only at website: **https://eprocure.gov.in/eprocure/app**. Tenderers / Contractors / Bidders are advised to follow the instructions provided in the e-procurement portal. Bid documents may be scanned with 100 dpi with black and white option which helps in reducing size of the scanned documents.

केवल ई-प्रोक्योरमेंट पोर्टल के माध्यम से प्राप्त बोलियों को ही खोला जाएगा। जो बोलियाँ उत्पादों/वस्तुओं के कार्य/आपूर्ति के वांछित प्रयोजनों को संपूर्ण रूप से पूर्ण करने में अक्षम होगी, उन बोलियों को अस्वीकार कर दिया जाएगा और केवल पूर्ण बोलियों पर विचार किया जाएगा। अंतर-विश्वविद्यालय त्वरक केंद्र के पास बिना

कोई कारण बताए किसी भी/सभी निविदाओं को आंशिक/पूर्ण रूप से स्वीकार/अस्वीकार करने का अधिकार सुरक्षित है और इस संबंध में आईयूएसी का निर्णय सभी बोलीदाताओं के लिए बाध्यकारी होगा।

Only bids received through e-procurement portal will be considered for opening. Bids not covering full scope of work/supply of the products/goods will be rejected and only complete bids will be considered. IUAC reserves the right to accept / reject any / all tenders in part / full without assigning any reasons whatsoever, and the decision of IUAC in this regard will be binding on all the bidders.

ई.एम.डी. का भुगतान करने के लिए बोलीदाता को "ऑनलाइन" भुगतान विकल्प का चयन करना होगा, जो https://services.sabpaisa.in/pages/iuac.html लिंक पर जाकर लागू होगा। बयाना राशि ऑनलाइन भुगतान के रूप में होगी और इसे बोली खोलने से पहले जमा किया जाना चाहिए। एम.एस.एम.ई./एन.एस.आई.सी. में पंजीकृत बोलीदाताओं को ई.एम.डी. के भुगतान से छूट दी गई है। एम.एस.एम.ई./एन.एस.आई.सी.(निविदा की गई वस्तु/कार्य के लिए पंजीकृत इकाई) से पंजीकृत निविदाकारों को तकनीकी बोली के साथ वैध पंजीकरण प्रमाणपत्र की प्रति https://eprocure.gov.in/eprocure/app वेबसाइट पर अपलोड करनी होगी।

Bidder has to select the payment option as "online" to pay the EMD as applicable by going to the link **https://services.sabpaisa.in/pages/iuac.html** . The Earnest Money Deposit shall be in the form of online payment and it should be deposited before the bid opening. Bidders registered with MSME/ NSIC are exempted from payments of EMD subject to having exemption certificate in the relevant category. However, they have to submit Bid Security Declaration Form. Tenderers registered with MSME/NSIC (the unit being registered for the item/work tendered) are required to upload copy of valid registration certificate in the website https://eprocure.gov.in/eprocure/app along with technical bid.

बोलीदाताओं को इस बात को विशेष ध्यान में रखने की सलाह दी जाती है कि वे अनिवार्य रूप से उपलब्ध कराए गए प्रारूप में ही अपनी वित्तीय बोलियां जमा करें और कोई अन्य प्रारूप स्वीकार्य नहीं होगा। यदि मूल्य बोली निविदा दस्तावेज के साथ मानक .XLS BOQ प्रारूप के रूप में दी गई है, तो इसेही डाउनलोड करना होगा और प्रारूप को संशोधित किए बिना ऑनलाइन भरना और जमा करना होगा। यदि बोलीदाता द्वारा BOQ फाइल को संशोधित पाया जाता है, तो बोली को अस्वीकार कर दिया जाएगा।

Bidders are advised to note that they should necessarily submit their financial bids in the format provided and no other format is acceptable. If the price bid has been given as a standard .XLS BOQ Format with the tender document, then the same is to be downloaded and to be filled and submitted online without modifying the format. **If the BOQ file is found to be modified by the bidder, the bid will be rejected**.

उपरोक्त निविदा के संबंध में कोई भी शुद्धिपत्र/संशोधन केवल https://eprocure.gov.in और www.iuac.res.in वेबसाइट पर जारी किया जाएगा। बोलीदाता, अपनी बोली जमा करने से पहले निविदा दस्तावेज से संबंधित, प्रकाशित होने वाले किसी भी शुद्धिपत्र की जानकारी रखें। निदेशक, अंतर-विश्वविद्यालय त्वरक केंद्र के पास बिना कोई कारण बताए किसी भी/सभी निविदाओं को आंशिक/पूर्ण रूप से स्वीकार/अस्वीकार करने का अधिकार सुरक्षित है।

Any Corrigendum / Amendments in respect of above tender shall be issued on website https://eprocure.gov.in and www.iuac.res.in only. Bidders should consider any corrigendum published on the tender document before submitting their bids. The Director, IUAC reserves the right to accept/reject any/all tenders in part/full without assigning any reasons thereof.

1. Inter-University Accelerator Centre (IUAC), New Delhi is an autonomous body of the University Grants Commission, Ministry of Education, Government of India. IUAC intends to purchase an "**Supply of Gas Management System (GMS) for Dilution Refrigerator**" as per the technical specifications **(Annexure A)** given in this document.

Name of Work	**"Supply of Gas Management System (GMS) for Dilution Refrigerator as mentioned in Annexure A " at IUAC, New Delhi.**
Tender Number	IUAC/NIT/15/HS/2026-27
Tender Value / Estimate only	Rs 40 Lakhs
Earnest Money Deposit	**Rs. 80000/- (Eighty thousand only)** Rs. Nil for MSME
Tender Document Fee	NIL
Bid Submission End Date and Time (Part - A and Part - B)	18/12/2026 at 3.00 pm
Technical Bid Opening Date (Part - A)	21/12/2026 at 3.30 pm
Price Bid Opening Date (Part - B)	To be intimated later on to the technically qualified bidders
Mandatory Minimum Local Content	Nil
Contact Persons	Administrative Officer (S&P) Inter University Accelerator Centre, Aruna Asaf Ali Marg, New Delhi 110067 E-mail: iuacstores@gmail.com, Phone: 011-24126018, 24126022.

2. The Director, IUAC reserves the right to accept or reject any or all tenders/offers either in part or in full or to split the order without assigning any reasons.

Section I

1. **Submission of Tender**: Tenders should be uploaded on the CPP Portal in two parts, i.e., Technical Bid (Part - A) and Price Bid / BOQ (Part - B).

1.1 Technical Bid (Part - A):

Prequalification of the bidder

The following criteria/information are essential to qualify the technical bid for the said item(s):

i. Confirmation of full technical details as given in Annexure A of the equipment should be submitted for technical evaluation. There must be proper technical information along with the details. The supplier must submit a point-wise compliance statement (Annexure I) with the documentary proof of the offer. Failing to do this may disqualify the bid.

ii. The bidder should be an indigenous supplier only and engaged in the field of manufacturing vacuum components such as vacuum valves, precision moving components (motion manipulators etc) and involved in bulding integrated vacuum projects which requires such devices. Supporting documents should be attached in the technical bid.

iii. The supplier must submit necessary catalogues, data sheets, application notes, etc. for the components manufactured in-house or procure from other vendors along with the bid for validating the specification.

iv. The bidder (Supplier/OEM) must have supplied at least one integrated vacuum component system to any research institute (IIT/IISER/ NIIT etc), university, or company of National repute**.**

v. As proof of such experience, the bidder must submit copy/copies of successfully executed Purchase Order(s) meeting **any one** of the following criteria:

i. **One** Purchase Order of value **≥ 80%** of the estimated tender value
OR

vi. **Two** Purchase Orders, each of value **≥ 50%** of the estimated tender value
OR

vii. **Three** Purchase Orders, each of value **≥ 40%** of the estimated tender value

viii. Copies of purchase orders and corresponding work completion certificates supporting manufacturing experience in vacuum components completed during last 5 years.

ix. Comprehensive details of the facilities proposed for execution of the work, along with the qualifications and experience of manpower in each team, clearly indicating whether the resources own by the bidder or provided through a subcontractor. The purchaser reserves the right to physically verify the capability and quality of the listed infrastructure during bid evaluation stage.

x. The vendor should have the in-house manufacturing set up and Helium leak testing facility. The list of in-house machinery should be provided.

xi. Vendor must have the capability to supply vacuum (angle / straight) valves (up to DN100 size) which have a leak rate of $\leq$1e-8 mbar lts/ sec across the sealing. This claim must be backed up by the appropriate purchase order and the user certificate validating the claim of the manufacturer.

xii. Details of the qualified welders along with valid welder qualification certificates.

xiii. Details of qualified manpower (name, educational qualification, work experience) for drawing preparation, manufacturing, welding and testing activities required for the scope of the work specified herein.

xiv. If any portion of the manufacturing/assembly/testing work is proposed to be subcontracted, a consent letter from the subcontractor clearly defining the scope of the subcontracted work shall be submitted.

xv. Details of the clean area available for the assemble and testing of the supposed work.

xvi. A list of licensed software for the proposed drawing work required for this job. IUAC will provide the drawings/design in .step format which the vendor should be capable of decoding at their end for further processing.

xvii. A test report of components qualified through ultimate vacuum testing, demonstrating achievements of a vacuum level better than 1e-6 mbar

1.2 Price Bid (Part B):

In this bid, the bidder is required to quote unconditional rates/prices for the SITC of the mentioned items as per the technical specifications given in ***Annexure A***. Quotes in INR will only be accepted. The price bid format is given in ***Annexure E*** and it must not be modified.

SECTION -II
GENERAL CONDITIONS OF TENDER

1. Bid Opening and Evaluation of Bids

1.1 The E-bids shall be opened on-line. The technical bids will be evaluated to shortlist the eligible bidders. The scoring matrix, as per the table given in annexure I, will be prepared and bids will be technically evaluated accordingly.

1.2 The technical bids of only eligible bidders shall be considered for further processing.

1.3 Bidder whose technical bid is found to be acceptable and meeting the eligibility requirements as specified in this tender will be considered as technically qualified.

1.4 IUAC will open commercial bids of only the technically qualified bids.

1.5 In case the day of bid opening is declared a holiday by the government, the E-bids will be opened on the next working day at the same time. No separate intimation shall be sent to the bidders in this regard.

1.6 Since the CPP portal is an online process, the E-bid opening or any other process may be delayed due to any technical/server issue. If any such issue arises, this will not be tantamount to process delay, and IUAC will not be responsible for the same.

1.7 **Pre-Bid Meeting:** An online/hybrid pre-bid meeting shall be held at IUAC, New Delhi, 10 days after the bid opening date, to clarify technical specifications and scope of work. The date of the meeting shall be notified through the CPP Portal.

2. **Bid Security (BS)/Earnest Money Deposit (EMD)**

2.1 The bidder shall furnish, as part of bid, a Bid Security (BS)/ Earnest Money Deposit (EMD) of amount as specified in the bid in the form of a bank guarantee/demand draft drawn on any scheduled/commercial /nationalized bank in favor of Inter University Accelerator Centre, New Delhi.

2.2 The EMD shall be submitted by the manufacturer or their specifically authorized dealer/bidder.

2.3 EMD @ 2% of the total estimate value, Rs 80,000 (Rupees eighty thousand) is payable by the bidder. Bidder has to select the payment option as **"online" to pay the EMD as applicable by going to the link https://services.sabpaisa.in/pages/iuac.html**. The Earnest Money Deposit shall be in the form of online payment, and it should be deposited before the bid opening. Bid Security shall be refunded to the unsuccessful bidders on award of contract and to the successful bidders on receipt of the Performance Security.

2.4 EMD is the mandatory requirement; however, the MSMEs/NSIC registered with Government Agencies are exempted from payment of Earnest Money Deposit (EMD) and are required to submit the Bid Security Declaration form, subject to conditions given below: -

2.5 MSMEs participating in the tender must submit a valid & authorized copy of the certificate of registration. The MSME's Bidder to note and ensure that the nature of services and goods/items manufactured mentioned in the MSME's certificate matches with the nature of the services and goods /items to be supplied as per the Tender.

2.6 The registration certificate issued by agencies must be valid as of the bid closing date of the tender. Bidder shall ensure the validity of the registration certificate in case the bid closing date is extended.

2.7 The MSMEs who have applied for registration or renewal of registration with any of the authorized agencies/bodies but have not obtained the valid certificate as on the closing date of the tender, are not eligible for exemption.

2.8 The Bid security of the unsuccessful bidder will be discharged/returned as promptly as possible but positively within a period 30 days after the expiration of the period of bid validity or placement of order, whichever is later, without any interest.

2.9 The successful Bidder's bid security will be discharged upon the Bidder furnishing the Performance Security, without any interest. Alternatively, the BS could also be adjusted against Performance Security. Any unavoidable delay in tender will be applicable to the submission of EMD as well.

2.10 The bid security/EMD may be forfeited:

If Bidder withdraws or amends or modifies or impairs or derogates its bid during the period of bid validity specified by the Bidder on the Bid Form;

OR

In case of a successful Bidder, if the Bidder fails to furnish order acceptance within 15 days of the order or fails to sign the contract or fails to furnish Performance Security within 21 days from the date of contract/order.

3. Reasonability of Prices

3.1 The bidder must quote the best minimum prices applicable for a premier Research institution/university/organization, and **Indian companies**

3.2 The quoting party should give a certificate to the effect that the quoted prices are the minimum and they have not quoted the same item(s) on lesser rates than those being offered to IUAC or to any other customer during the current financial year.

3.3 Copies of supply orders received by the bidder during the last 3 years for the item/model to be submitted for assessing the reasonability.

4. **Escalation:**

No cost escalation over and above the item rates quoted by the bidder will be entertained.

5. Declaration of local content:

As per para 9 (a) of PPP-MII Order, 2017 (as amended on 16.09.2020), the bidders are required to self-certify the local content in their product for purchase value less than Rs.10 crore. For purchases more than Rs.10 crore, as per para 9 (b) of PPP-MII Order, 2017, a certificate from the statutory auditor or cost auditor of the company (in the case of companies) or from a practicing cost accountant or practicing chartered accountant (in respect of suppliers other than companies) is required to be submitted.

PPP-MII Order, 2017 (as amended on 16.09.2020) classifies the suppliers into the following 3 categories:

a. 'Class-I local supplier' – Suppliers offering items with equal to or more than 50% local content

b. 'Class-II local supplier' - Suppliers offering items with equal to or more than 20% but less than 50% local content

c. 'Non-local supplier' - Suppliers offering items with Less than 20% local content.

Bidders are required to submit a local content declaration as per Annexure C. IUAC has the right to conduct random audits to ensure that declarations are accurate and substantiated.

False declaration will be in breach of Code of Integrity under Rule 175(1)(i)(h) of the General Financial Rules for which a bidder or its successors can be debarred for up to two years as per Rule 151(iii) of the General Financial Rules along with such other actions as may be

permissible under law."

6. **Performance Security (PS)**

6.1 Within 15 days of receipt of the notification of award of Contract/Purchase Order, the Supplier shall furnish performance security.

6.2 The amount of the Performance Security shall be 5% of the total contract value (in INR), valid up to the completion of contract obligation, i.e. till Supply Installation, Testing, commissioning (SITC) and acceptance.

6.3 The proceeds of the Performance Security shall be payable to the Purchaser as compensation for any loss resulting from the Supplier's failure to complete its obligations under the contract.

6.4 The Performance Security shall be in one of the following forms: -

(a) A Bank Guarantee issued by a nationalized/scheduled bank located in India or a bank located abroad in the form provided after the award of the contract.

OR

(b) A Banker's cheque or account payee Demand Draft in favour of IUAC.

6.5 The performance security will be forfeited and credited to the IUAC's bank account in the event of a breach of contract by the Bidder. It will be refunded to the bidder without interest after he/she duly performs and completes the contract in all respects (full performance security will be forfeited, even if the bidder has partially executed the work), but not later than 60 (sixty) days of completion of all such obligations under the contract. The Performance Security will be discharged by the Purchaser and returned to the Supplier not later than 60 days following the date of completion of the Supplier's performance obligations.

6.6 In the event of a breach of contract by the supplier, the performance security shall be forfeited.

7. Warranty / Support:

7.1 The bidder shall be responsible for installation, commissioning, demonstration, inspection, and testing of the equipment, wherever applicable, and shall provide necessary after-sales technical support during the warranty period and thereafter as specified.

7.2 The equipment shall carry a **minimum one-year manufacturer warranty** from the date of successful installation, commissioning, and acceptance of the equipment by IUAC, New Delhi. In case of any manufacturing defect, malfunction, or failure of the system or any of its components during the warranty period, the bidder/vendor shall rectify the defect or replace the defective component(s), as applicable, **free of cost**.

As IUAC will be providing many of the high value vacuum pumps, gauges, etc. (costing lacs of rupees) for this work to the successful bidder, These should be handed over to them in working conditions and the vendor should give a receipt for that. In case any of the IUAC supplied equipment goes bad, the vendor will be liable to replace the items with the same specification. The vendor should also certify that they are capable of handling these equipments.

7.3 All costs associated with warranty rectification or replacement, including the cost of components, labour, packing, insurance, transportation/freight, customs duty, octroi, local taxes, and any other applicable charges, shall be borne by the bidder/vendor.

7.4 The equipment shall be supported by an authorized representative/technical support facility in India, adequately supported by technical personnel of the principal manufacturer, for providing timely after-sales service and technical assistance.

7.5 The bidder shall submit an undertaking from the original manufacturer confirming that the manufacturer shall provide necessary technical support (for their items) to the bidder during the warranty period and shall facilitate the bidder with relevant technology/product updates and technical assistance, as required. How-ever it will be responsibility of the vendor to provide warranty for 1 year for all the items supplied in the project.

8. **COMMENCEMENT OF WARRANTY PERIOD**:

The warranty period of an item shall commence after receipt of the item in good working condition and from the date of its acceptance at IUAC New Delhi. The warranty period with all the obligations and validity of the Performance Guarantee will be extended for the period of delay in satisfactory installation of parts/items and/or delay in warranty services as mentioned in Clause 7.4.

9. **Validity of Tender**:

9.1 The rates quoted in the tender shall hold good for 180 days from the date of opening of the price bid.

9.2 In exceptional circumstances, the Purchaser may further solicit the Bidder's consent to an extension of the period of validity. The request and the responses thereto shall be made in writing (E-mail). The bid security provided shall also be suitable for extension. A bidder may refuse the request without forfeiting its bid security. A Bidder granting the request will not be required nor permitted to modify its bid.

10. **Terms of Payment**:

10.1 90% of the payment shall be made after confirming the supply and final acceptance at IUAC.

10.2 The remaining 10% will be paid after submission of the Performance Bank Guarantee (PBG) for the defective liability period (DLP) of successful operation.

10.3 The payment process will be initiated on submission of the bills by the bidder and after due certification by the concerned IUAC personnel.

10.4 All payments will be made after statutory deductions.

11. **Guarantee/Defect liability period**:

11.1 The supplied system should be guaranteed from manufacturing/engineering defect and bad material/workmanship for a minimum period of 12 months (1 year) from the date of acceptance of the goods by IUAC. During this period, if any replacement/ repairs/ rectification of any of the supplied items, etc., is needed, the supplier shall do the same free of cost to IUAC.

11.2 If the equipment/ part needs to be shipped to the vendor's site for repair/rectification during the guarantee period, the shipment charges shall be borne by the supplier. The supplier shall guarantee that all equipment will work satisfactorily and that the performance and efficiency of the equipment shall not be less than the specified values.

12. **Timeline for completion of work:**

The system should be supplied to IUAC within 100 days from the date of issue of the work/purchase order or by 15th March 2027, whichever is earlier. Any delay in completion of the work/supply due to reasons attributable to the vendor/manufacturer is liable to liquidated damages as per Clause 13 of this tender document. However, under the force-majeure conditions as per clause 14 of this tender document, IUAC may grant a suitable time extension for which the vendor has to request along with the justification/reasons, well in advance to the Director, IUAC, for approval without any prejudice or price escalation.

13. **Liquidated damages:**

In case of completion of the project is delayed beyond the specified period of 180 days for reasons attributable to the supplier, deductions on account of liquidated damages @ 0.5% per week, subject to a maximum of 5% of the total order value, will be deducted.

14. **Force Majeure (FM):**

14.1 IUAC may grant an extension of the time limit set for the supply items in case it is delayed by force majeure beyond the supplier's control. Force majeure is defined an event of effect that cannot reasonably be anticipated such as acts of God (like earthquakes, floods, tsunami etc.), the direct and indirect consequences of wars (declared or undeclared), national emergencies, pandemics/epidemics, civil commotions and strikes (only those which exceeds a duration of ten continuous days) at successful Tenderer's factory. Apart from the extension of the time limit, force majeure does not entitle the successful tenderer to any relaxation or to any compensation of damage or loss suffered. The Vendor must give notice of FM within a reasonable time as the conditions permit (not later than 14 days after its occurrence), and it cannot be claimed ex-post facto. There may be an FM situation affecting the purchase organization only. In such a situation, the purchase organization is to communicate with the supplier along similar lines as above for further necessary action. If the performance in whole or in part or any obligation under this contract is prevented or delayed by any reason of FM for a period exceeding 90 (ninety) days, either party may, at its option, seek to terminate the contract without any financial repercussion on either side. The decision of the Director, IUAC will be final and binding for the bidder.

14.2 Notwithstanding the punitive provisions contained in the contract for delay or breach of contract, the supplier would not be liable for imposition of any such sanction so long as the delay and/or failure of the supplier in fulfilling its obligations under the contract is the result of an event covered in the Force Majeure clause.

15. **Final Acceptance:**
The final acceptance of the system is defined as successful supply, installation and acceptance tests at IUAC to substantiate compliance with the specification mentioned in Annexure A.

16. **Price Negotiation**

Normally, there shall not be any negotiation. Negotiations, if at all, shall be as per Rule 173 (xiv) of GFR 2017.

17. **Termination for Insolvency**

IUAC may at any time terminate the Contract by giving written notice to the Supplier if the Supplier becomes bankrupt or otherwise insolvent. In this event, termination will be without compensation to the Supplier, provided that such termination will not prejudice or affect any right of action or remedy, which has accrued or will accrue thereafter to the Purchaser.

18. **Dispute Resolution:** Any dispute and or difference arising out of or relating to this contract will be resolved through joint discussion of the authorities' representatives of the concerned parties. However, if the disputes are not resolved by joint discussions, then the matter will be referred for adjudication to a sole Arbitrator appointed by the Director, IUAC, New Delhi. The decision of the sole Arbitrator shall be final and binding on all the parties. The arbitration proceedings shall be governed by the Indian Arbitration and Conciliation Act 1996 as amended from time to time. The cost of Arbitration shall be borne by the respective parties in equal proportions. Arbitration proceedings will be held at Delhi/New Delhi only. "

This notice inviting tender will form part of the contract agreement to be executed by the successful tenderer.

19. **Integrity Pact:**

19.1 The bidder is required to enter into an integrity pact with the IUAC in the format at Annexure H. The integrity pact enclosed as Annexure H will also be signed by IUAC at the time of execution of the agreement with the successful bidder. While submitting the bid, the integrity pact shall be signed by the duly authorized signatory of the bidder. In the case of failure to submit the integrity pact duly signed and witnessed along with the bid, the bid is likely to be rejected.

In case of any contradiction between the terms and conditions of the bid document and the integrity pact, the former will prevail.

Independent External Monitors (IEMs) on the panel of the Ministry of Education/University Grants Commission (if any) will be monitoring the integrity pact.

20. **Clarification of Bids and Shortfall Documents**

During the evaluation of Techno commercial or Financial Bids, Indenter on behalf of IUAC may, at its discretion, but without any obligation to do so, ask the Bidder to clarify its bid by a specified date. Bidder should answer the clarification within the specified date (or, if not specified, 7 days from the date of receipt of such request). The request

for clarification shall be submitted in writing or electronically, and no change in prices or substance of the bid shall be sought, offered, or permitted that may grant any undue advantage to such bidder.

If discrepancies exist between the uploaded scanned copies and the Originals submitted by the bidder, the original cop etc. shall prevail. Any substantive discrepancy shall be construed as a violation of the Code of Integrity, and the bid shall be liable to be rejected as non-responsive in addition to other punitive actions under the Tender Document for violation of the Code of Conduct.

IUAC reserves its right to, but without any obligation to do so, to seek any shortfall information/documents only in case of historical documents which pre-existed at the time of the tender opening, and which have not undergone change since then and does not grant any undue advantage to any bidder.

21. Alternate Dispute Resolution (ADR) mechanism and Mediation procedure

The authorized officials of the bidder signing the integrity pact shall not approach the courts while representing the matter to IEMs, and he/she will await their decision in the matter. The integrity pact shall be deemed as part of the Bid document.

22. C**ode of Integrity for Public Procurement**

22.1**Corrupt or Fraudulent Practices**

IUAC requires that the bidders who wish to bid for this project have the highest standards of ethics. IUAC will reject a bid if it determines that the Bidder recommended for award has engaged in corrupt or fraudulent practices while competing for this contract. IUAC may declare a vendor ineligible, either indefinitely or for a stated duration, to be awarded a contract if it at any time determines that the vendor has engaged in corrupt and fraudulent practices during the execution of the contract. The integrity pact should be signed by the competent authority of the vendor. In Pursuit of this policy, the following are defined.

S. N.	Term	Meaning
(a)	**Corrupt practice**	The offering, giving, receiving, or soliciting, directly or indirectly, of anything of value to influence the action of a public official in the procurement process or in contract execution.
(b)	**Fraudulent practice**	a misrepresentation or omission of facts in order to influence a procurement process or the execution of a contract.
(c)	**Collusive practice**	means a scheme or arrangement between two or more bidders, with or without the knowledge of the purchaser, designed to establish bid prices at artificial, non-competitive levels.
(d)	**Coercive practice**	means harming or threatening to harm, directly or indirectly, persons or their property to influence their participation in the procurement process or affect the execution of a contract.

(e)	**Anti-competitive practice**	any collusion, bid rigging or anti-competitive arrangement, or any other practice coming under the purview of the Competition Act, 2002, between two or more bidders, with or without the knowledge of the purchaser, that may impair the transparency, fairness and the progress of the procurement process or to establish bid prices at artificial, non-competitive levels
(f)	**Conflict of interest**	participation by a bidding firm or any of its affiliates that are either involved in the consultancy contract to which this procurement is linked; or if they are part of more than one bid in the procurement; or if the bidding firm or their personnel have relationships or financial or business transactions with any official of purchaser who are directly or indirectly related to tender or execution process of contract; or improper use of information obtained by the (prospective) bidder from the purchaser with an intent to gain unfair advantage in the procurement process or for personal gain.
(g)	**Obstructive Practice**	materially impede the purchaser's investigation into allegations of one or more of the above mentioned prohibited practices either by deliberately destroying, falsifying, altering; or by concealing of evidence material to the investigation; or by making false statements to investigators and/or by threatening, harassing or intimidating any party to prevent it from disclosing its knowledge of matters relevant to the investigation or from pursuing the investigation; or by impeding the purchaser's Entity's rights of audit or access to information.

23. No deviations in respect of Tender conditions are acceptable. In this bid, the bidder should upload the following documents:

    1. Technical specifications / datasheets / user manual of the product indicating its ability to meet the technical specifications laid down in **Annexure A** of this NIT.
    2. Tender Acceptance Letter (written on company letterhead, duly signed and stamped) as per format provided in **Annexure B**, as a token of acceptance of the NIT conditions, with this bid.
    3. Declaration of local content as per **Annexure C**.
    4. Profile of the Tenderer as per **Annexure D**.
    5. Price bid/BOQ as per the **Annexure E**.
    6. List of documents (checklist/compliance sheet) to be attached as per **Annexure F**.
    7. Details of similar instruments supplied & service support as per **Annexure-G**
    8. Code of Integrity undertaking on letterhead as per **Annexure H**
    9. Technical eligibility criteria table as per **Annexure I**
    10. The bidder should not be blacklisted by any Government, or Government Department, whether at the Central/State/District levels across India. An undertaking in this regard, as per **Annexure-F** should be enclosed.

11. Copies of the previous three financial years (2022-23, 2023-24 & 2024-25) Income Tax Return (ITR) as part of **Annexure-F**
12. Average annual turnover during the last three financial years ending 31st March, 2025, (2022-23, 2023-24 & 2024-25) shall be at least Rs. 5 Crores. Duly audited financial statement/balance sheet/certified by CA to be submitted as supporting documents, as part of **Annexure-F**
13. Proof of Earnest Money Deposit. MSMEs have to submit a Bid Securing Declaration in lieu of EMD/Bid Security, as per **Annexure J**.
14. Price reasonability Certificate.
15. Self-attested copies of GST registration and PAN number.
16. IUAC appointed committee reserves the right to conduct on-site demonstration of the quoted specification on the existing instrument installed in India at any point of time during the tendering process/before placement of the purchase order.
17. Comprehensive details of the facilities proposed for execution of the work, along with the qualifications and experience of manpower in each team, clearly indicating whether the resources own by the bidder or provided through a subcontractor. The purchaser reserves the right to physically verify the capability and quality of the listed infrastructure during bid evaluation stage.
18. The vendor should have the in-house manufacturing set up and Helium leak testing facility. The list of in-house machinery should be provided.
19. Details of the qualified welders along with valid welder qualification certificates.
20. Details of qualified manpower (name, educational qualification, work experience) for drawing preparation, manufacturing, welding and testing activities required for the scope of the work specified herein.
21. If any portion of the manufacturing/assembly/testing work is proposed to be subcontracted, a consent letter from the subcontractor clearly defining the scope of the subcontracted work shall be submitted.
22. Details of the clean area available for the assemble and testing of the supposed work.
23. A list of licensed software for the proposed drawing work required for this job.
24. A test report of components qualified through ultimate vacuum testing, demonstrating achievements of a vacuum level better than 1e-6 mbar.

Section III

1. **Technical specifications**: The bidder should agree on the technical specifications as mentioned in Annexure-A, and should provide all the necessary documents supporting the technical specifications mentioned below. A duly constituted committee has the right to ask for the demonstration of technical specifications.

Annexure – A (Technical Specifications)

Technical specifications of Gas Management System (GMS) for Dilution Refrigerator

IUAC intends to procure a Gas Management System (GMS) for application with a Dilution Refrigerator as part of the development of an indigenous Dry Dilution Refrigerator. The GMS shall be designed for the safe and reliable handling, storage, circulation, recovery, and recirculation of the helium-3 and helium-4 mixture.

Supply of Gas Management System (GMS) for Dilution Refrigerator

1. Scope of Supply

The scope of work comprises the design, fabrication, assembly, integration, testing and supply of a complete Gas Management System (GMS) for a Dry Dilution Refrigerator. The Gas Management System shall provide the required vacuum pumping, gas circulation, gas isolation, pressure monitoring, flow control and interconnection between the various components of the Dry Dilution Refrigerator. The system shall be designed as a modular assembly consisting of individual sub-assemblies which shall be **independently leak tested** ($\leq 1xE^{-8}$ mbar.lt/s), **certified, documented** and subsequently integrated into a common 19-inch custom equipment rack. A 3D CAD model **(.step file)** will be provided as a reference to the vendor. The vendor is free to make any necessary changes as long as they are approved by the concerned IUAC personnel.

For this tender, IUAC provides the design and then the vendor has to fabricate (including manufacture, procure , integration required), assemble as per the IUAC design. In this case the responsibility of the vendor comes down to proper assembly, proper sizes, appropriateness of the supplied components, leak tightness and operation of the supplied components.

Note 1 : *All Vacuum Pumps (3 Turbo Pumps and 3 Rotary Pumps)- 6 Nos., Vacuum Gauges- 6 Nos. and Vacuum controllers for gauge readings will be provided by the IUAC to the vendor as a free issue material.*

Note 2 : *Many of the tubing/bellow insert connections and instrumentations are special in nature like mass flow meter, back pressure regulator, bellow sealed pressure valves or fine flow control valve. These items are to be procured from the respective vendors like Swagelok, Aalborg, VAT, SMC etc. The part no of these components are given in the table.*

GMS shall comprise, but not be limited to, the following major sub-assemblies.

1. Inlet Line Assembly
2. Vacuum Chamber (VC) Line Assembly
3. Still Line Assembly
4. Integrated Valve Box – 1 (IVB-1)
5. Integrated Valve Box – 2 (IVB-2)
6. Helium Storage Tank Assembly
7. Rack assembly for pumps
8. Associated vacuum valves, gas valves, pressure gauges, flow meters, regulators, fittings, connectors and other accessories as specified in the Table 1.

The complete GMS shall be supplied (as per the line diagram Fig-1) as a fully integrated, assembled and tested system, and the vacuum pumps provided by the purchaser. The overall Gas Management System shall be arranged in accordance with the system flow diagram provided with this specification shown in Figure 1. The overall assembly model rendered in 3D modelling software is also give for reference in Figure 2.

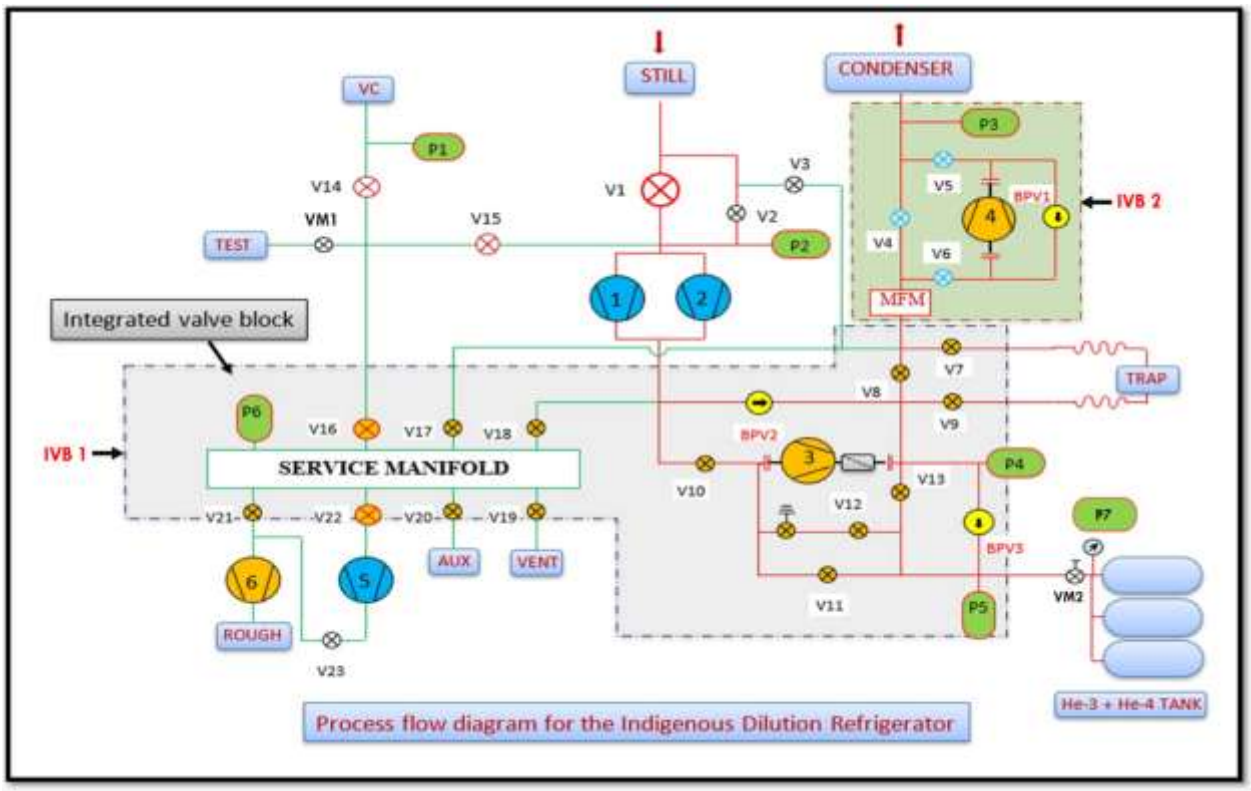

Figure 1: Schematic representation of the connection in the Gas Management System (GMS) system for dilution refrigerator.

Full assembly of GMS with all pumps, gauges, valves, Fittings and controllers.

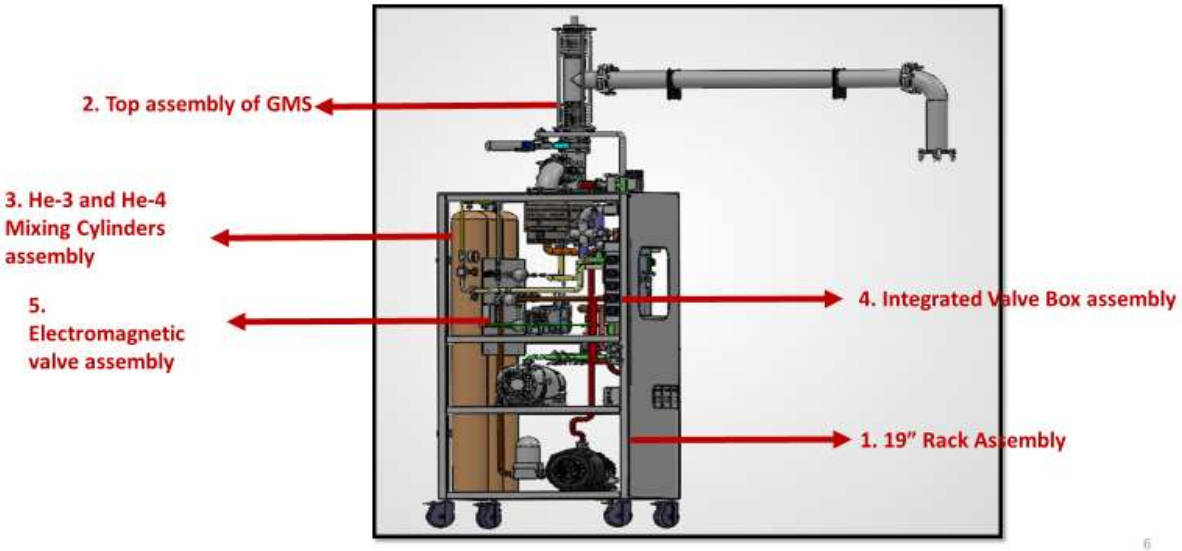

Figure 2: Final assembly of the components

The complete system shall reliably operate in conjunction in terms of the intended leak tightness during the combined operation. All components shall be properly supported and arranged to permit convenient operation, inspection and maintenance. The layout shall minimize unnecessary bends, dead volumes and potential leak points. All vacuum and gas connections shall be compatible with the specified flange and tubing standards. The supplier shall provide all necessary minor fittings, clamps, seals, supports, fasteners and accessories required for completing the assembly, even where such items are not individually shown in the system drawing, provided they are necessary for proper functioning of the supplied sub-assembly.

The vendor shall also supply part drawings in .pdf format and 3D models as compatible .step files.

2. Schedule of Requirements

The following table summarizes the tentative GMS vacuum components required to be supplied to execute this job. Minor variations in the listed quantities need to be taken into account for the bidding purpose. Quantities are total quantities derived from the attached component list; the intended application/section is also indicated

Sl. No.	Description	Size / Connection	Qty.
1	Elbow	KF-16	0
2	Elbow	KF-25	1
3	Elbow	KF-40	0
4	Elbow	DN-100	2
5	Elbow	1/4" Union Swagelok	3
6	Elbow	1/2" Union Swagelok	2
7	Tee	KF-16	0
8	Tee	KF-25	4
9	Tee	KF-40	3
10	Tee	1/2" Union Swagelok	2
11	Tee	DN-100(100-25-100)	1
12	Tee	1/4" SL	3
13	Tee	1/2" SL	0
14	Cross	KF-16	0
15	Cross	KF-25	0
16	Cross	KF-40	1
17	Cross	DN-100	1
18	Cross	1/4" Swagelok	1
19	Valve(A)	KF-16	0
20	ON-OFF (EP)	KF-25	2
21	ON-OFF(EP)	KF-40	2
22	ON-OFF(EP)	DN-100 (STRAIGHT) - NO	1
23	ON-OFF	1/4" SL (STRAIGHT)	3

24	Manual Valve (Straight)	KF-25	1
25	Manual valve	1/2" (Swagelok)	1
26	Manual valve	-	0
27	Union nipple	KF-16	2
28	Union nipple	KF-25	3
29	Union nipple	KF-40	1
30	Union nipple	DN-100	2
31	Centre ring	KF-16	6
32	with holder	KF-25	36
33	with holder	KF-40	12
34	with holder	DN-100	0
35	Clamp	KF-16	6
36	Clamp	KF-25	36
37	Clamp	KF-40	12
38	Clamp	DN-100 (bolts+Clamp Pairs)	80
39	Hose	3/8"	10
40	Hose	KF-16	4
41	Hose	KF-25	13
42	Hose	KF-40	3
43	blind	KF-16	2
44	blind	KF-25	4
45	blind	KF-40	3
46	blind	DN-100	1
47	Sp Connector	1/2"F-1/2"F-1/4"FNPT (Swagelok)	1
48	Sp Connector	1/4"MVCR-1/4"Ferrule (Swagelok)	2
49	Pressure gauge	Pressure Gauge (-14.7-0-5 psig)	1
50	Mass flow meter	He-3 MFM (500µm/s), Aalborg	1
51	Sp Connector	12 nos pm connector, SMC	2
52	Sp Connector	150m long, 4mm dia PU tube, SMC	1
53	Sp Connector	10mm water panel connector	2
54	Sp Connector	Inline tee (water)	2
55	Sp Connector	1/2" tube to kf25 nipple elbow	1
56	Sp Connector	1/4" SW union (Panel), Swagelok	1
57	Sp Connector	back pressure regulator(1/4"FVCR), Swagelok	3
58	Sp Connector	1/4" f npt to tube, Swagelok	1
59	Sp Connector	1/4" SW blind PLUG, Swagelok	1
60	Sp Connector	Flow control valve (KF-10, VAT)	1

3. Detailed Technical Specification – GMS Components

The GMS shall be fabricated as a set of modular sub-assemblies. Each sub-assembly shall be completely assembled and individually leak tested for its leak tightness ~1e^{-8} mbar.lts/s and these documents are to be shared with IUAC before final assembly and integration into the final rack-mounted system. The overall dimensions are given in figure 3.

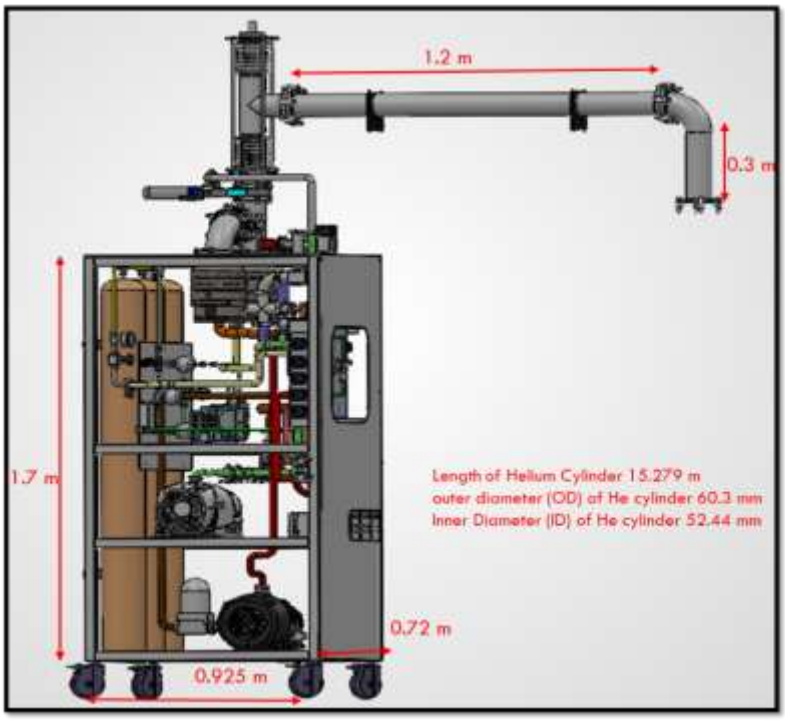

Figure 3: Entire assembly

The detailed requirements for the major sub-assemblies are described below.

3.1. Inlet Line Assembly

The Inlet Line Assembly shall provide the required interface for introduction, isolation and monitoring of helium gas into the Gas Management System. The assembly shall comprise a DN 100 inlet line with the specified vacuum/gas-rated components, valves, pressure gauges and associated fittings as indicated in the flow drawing, Fig-4 , and Table-1. The overall dimensions are as given in figure 4(c).

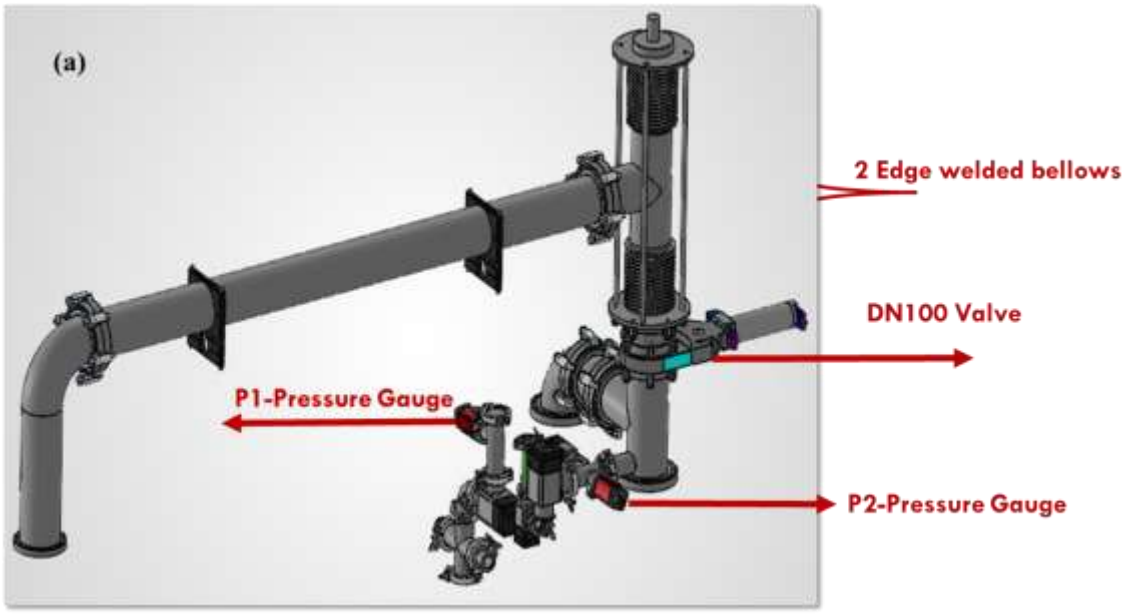
(a)
2 Edge welded bellows
DN100 Valve
P1-Pressure Gauge
P2-Pressure Gauge

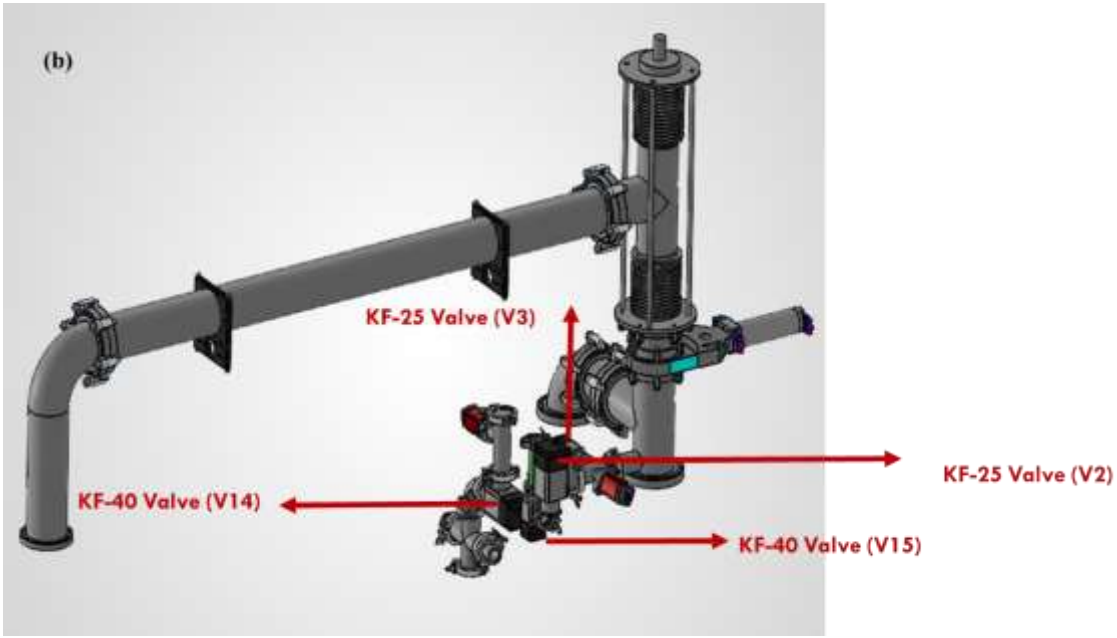
(b)
KF-25 Valve (V3)
KF-25 Valve (V2)
KF-40 Valve (V14)
KF-40 Valve (V15)

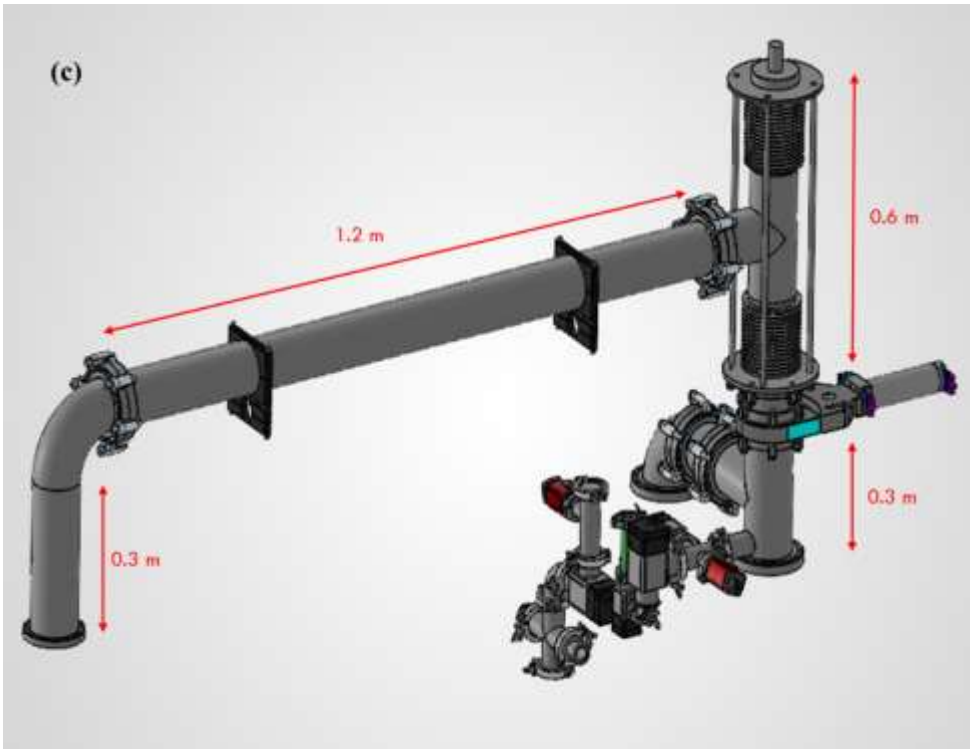

Figure 4: Inlet line assembly includes : (a) pressure gauges, valves & bellows and (b) KF valves (c) Inlet line assembly with dimensions.

3.2. Vacuum Chamber (VC) Line Assembly

The Vacuum Chamber (VC) Line Assembly shall provide the required vacuum connection between the Gas Management System and the vacuum chamber of the Dry Dilution Refrigerator. The assembly shall incorporate the required vacuum valves, pressure gauges, fittings and associated components as indicated in the flow diagram, figure 5 and Table 1.

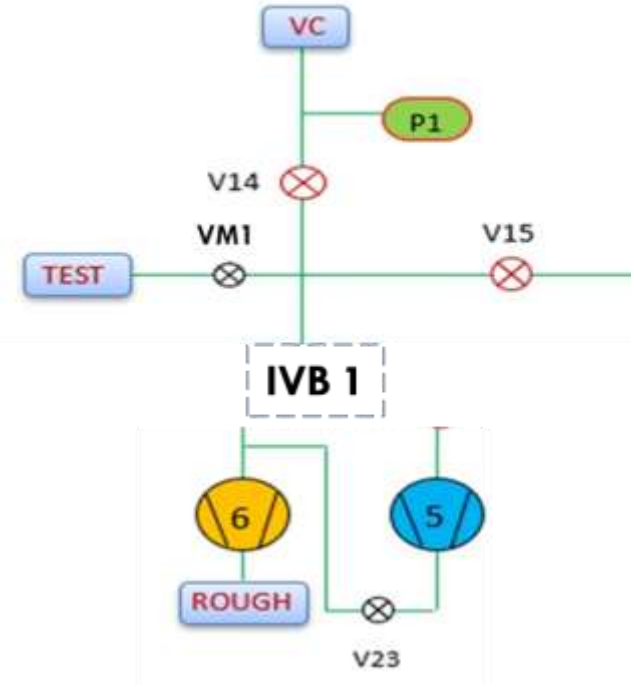

Figure 5: Assembly of VC line.

3.3. Still Line Assembly

The Still Line Assembly shall provide the required gas/vacuum connection associated with the still section of the Dry Dilution Refrigerator. The assembly shall comprise the specified valves, pressure gauges, fittings, tubing and vacuum connections required for operation of the still circuit.

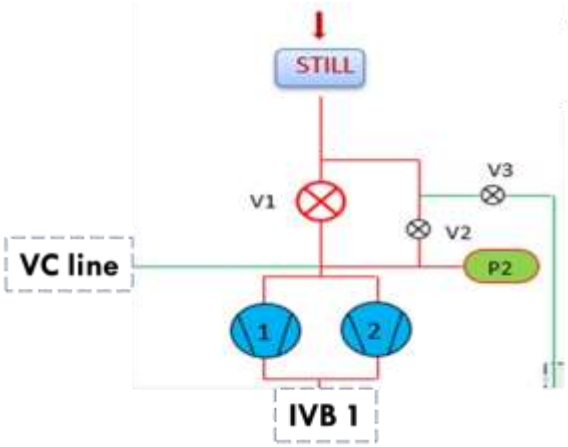

Figure 6: Assembly of still line.

3.4. Integrated Valve Box – 1 (IVB-1)

Integrated Valve Box–1 shall be a compact integrated gas-management assembly fabricated using an Al 6065 block. The valve box shall incorporate 14 nos of vacuum valves, pressure gauges, flow meter and associated gas/vacuum components into a single integrated assembly. The arrangement shall minimize external tubing connections and unnecessary dead volume while maintaining adequate accessibility for operation and maintenance. The valve box need to independently tested for vacuum leak integrity ($\leq$1xE-8 mbar lt/s). The model is as given in Figure 7.

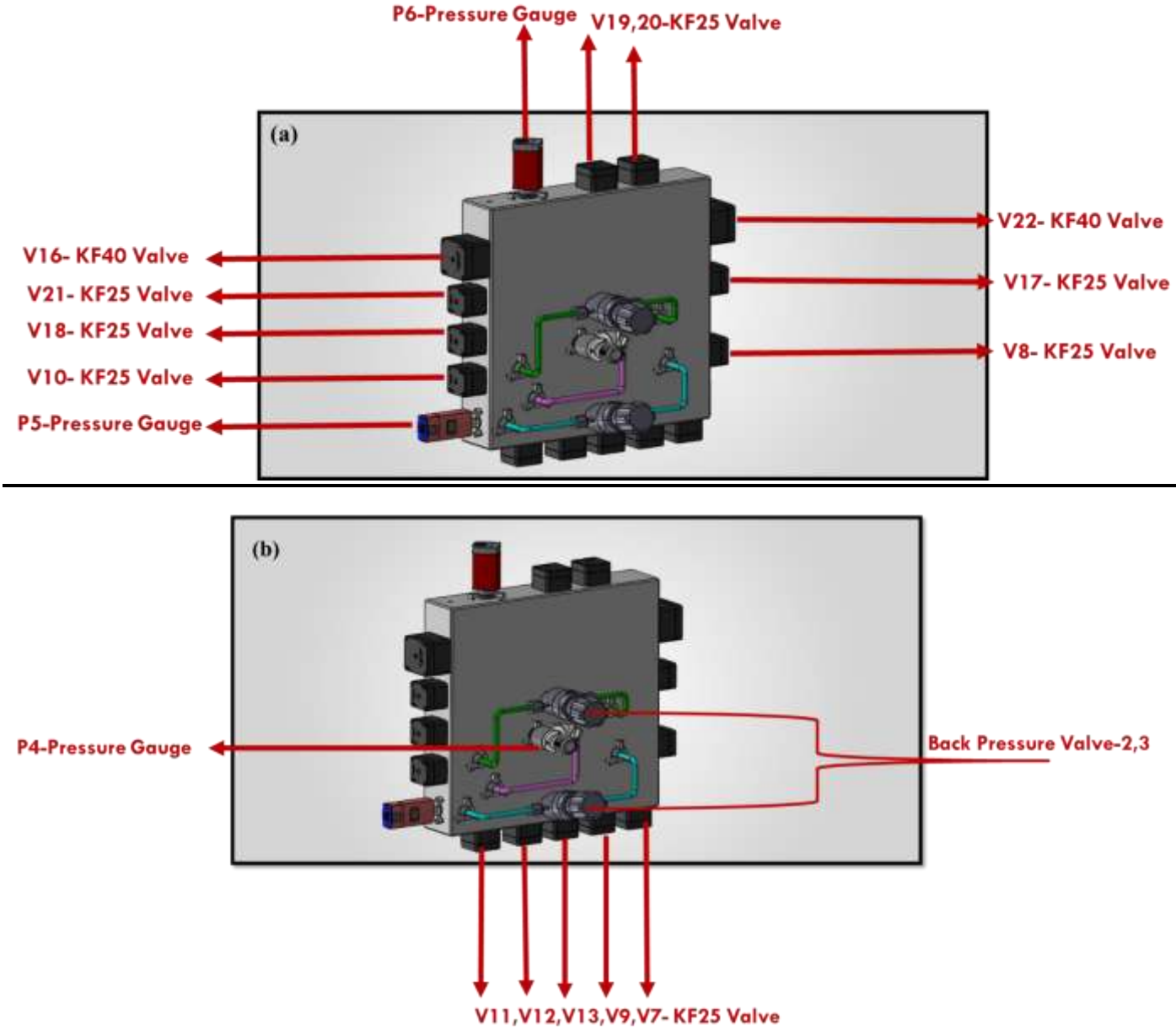

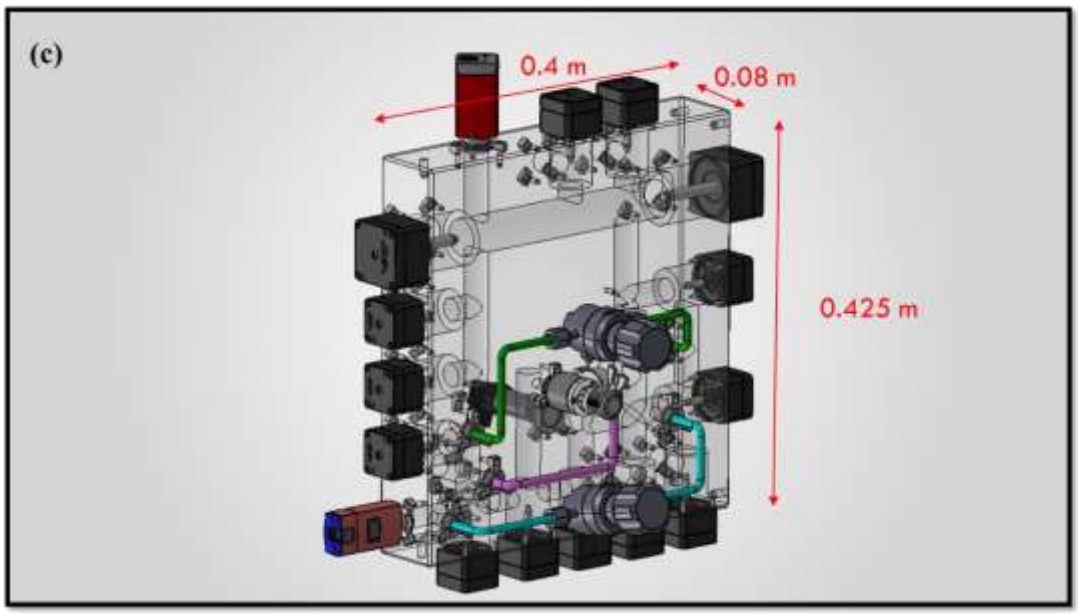

Figure 7: Integrated valve box assembly of GMS system (IVB 1) (a) & (b) represent the naming of each part and (c) represent the dimension and internal connection of the valve box assembly .

3.5. Integrated Valve Box – 2 (IVB-2)

Integrated Valve Box–2 shall be fabricated using 3-4 mm thick SS304 sheet, as specified in the approved design, and shall incorporate the required valves, pressure regulators and associated fittings. The assembly shall provide the required gas routing, isolation and pressure regulation functions for the designated GMS circuit. The model is as given in Figure 8.

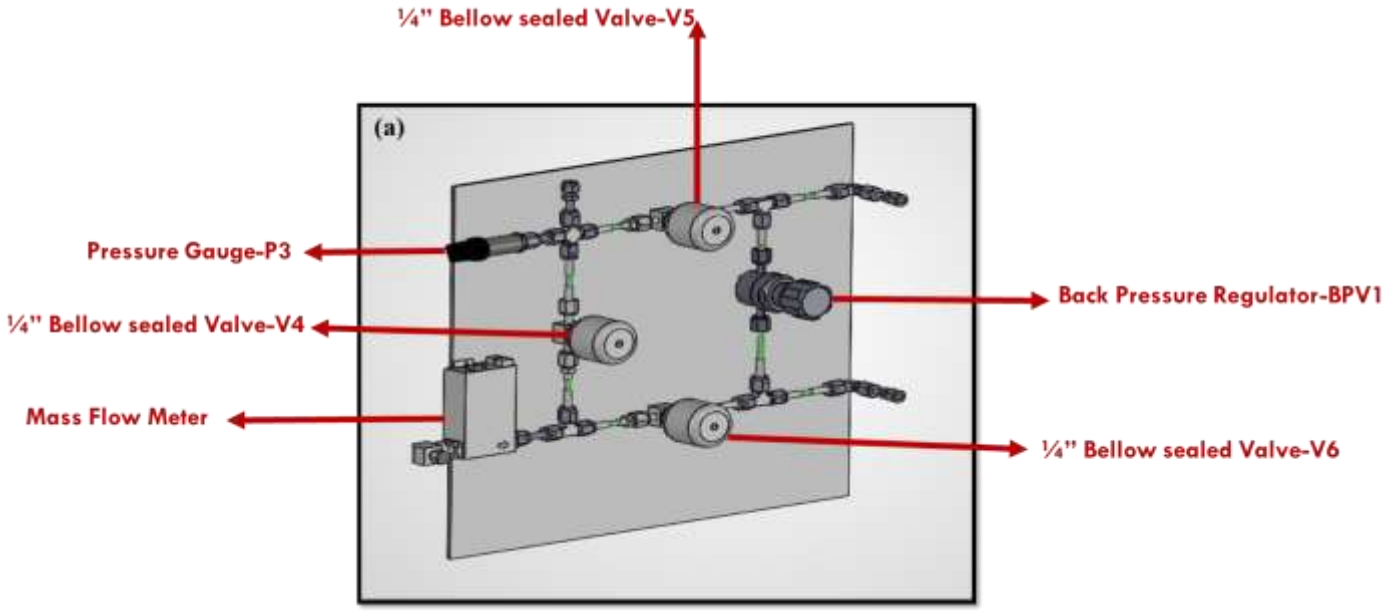

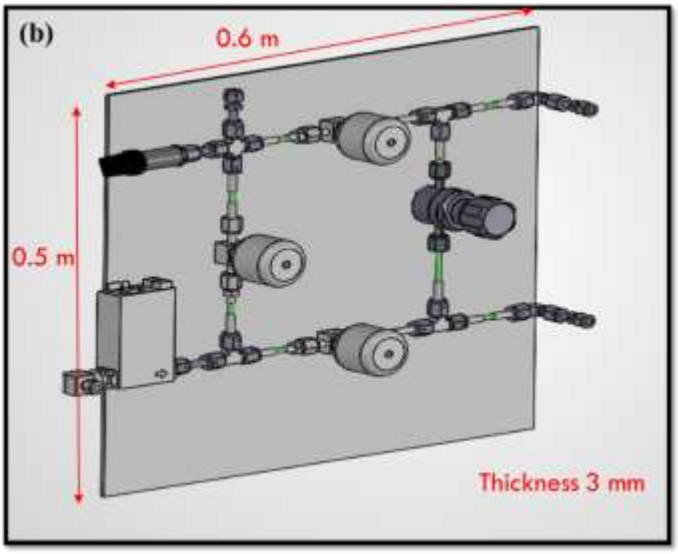

Figure 8: Integrated valve box assembly of GMS system (IVB 2) (a) naming of each part, (b) dimensions

3.6. Helium Storage Tank Assembly

The GMS shall include three (03) helium storage tanks for storage and handling of helium gas. The tanks shall be fabricated from stainless steel SS304 and shall be suitable for the intended helium gas service. The tanks shall be powder-coated externally and shall be provided with all required mounting, isolation and connection provisions. The dimensions are 168.3 mm x 161.3mm (od x id) and 1.5m height (6 inch NB SCH 10S) for a total of storage capacity 100L tank. The tank assembly with dimensions is as shown in Figure 9. The final tank design shall comply with the applicable pressure-vessel and safety requirements.

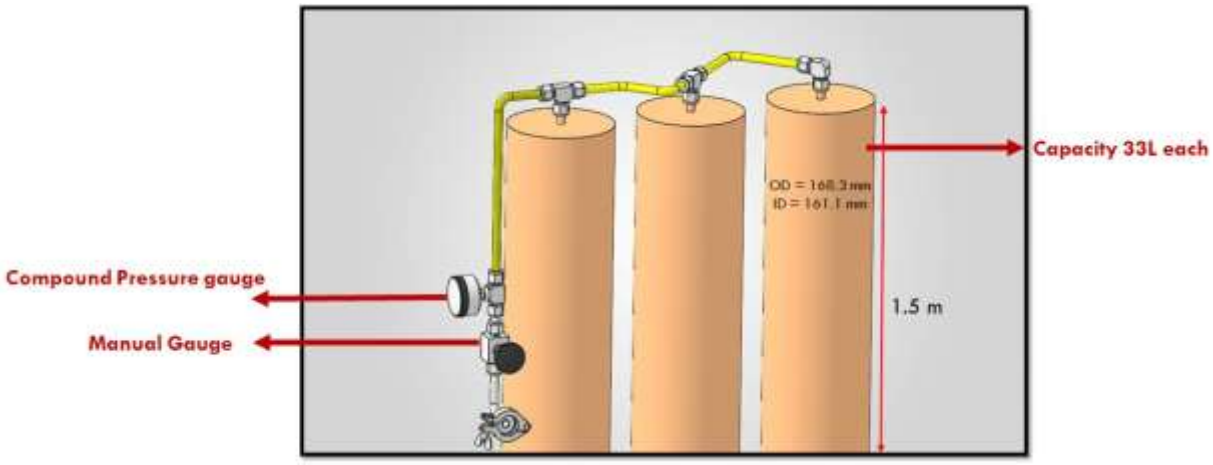

Figure 9: He^3 and He^4 Mixing Cylinders assembly

In addition to the major sub-assemblies described above, the GMS shall include all additional fittings, valves, gauges, regulators, connectors, clamps, hoses, adapters, seals and other accessories

specified in the Table 1. These components shall be properly integrated into the respective sub-assemblies and shall not be considered as loose/unconnected supply unless specifically indicated otherwise.

The supplier shall ensure that all mating components are compatible in terms of:

- Connection standard.
- Size.
- Pressure rating.
- Material compatibility.
- Vacuum compatibility.
- Gas compatibility.
- Installation requirements.

The detailed part list with locations of valves and gauges is given in the Table 1 below.

Table 1: Part list

Item	Size	Still	IVB -1	IVB-2	VC line	He3 Gas	Others	Total	Remarks
Elbow	KF-16							0	
	KF-25	1						1	
	KF-40							0	
	DN-100	2						2	
	1/4" Union (Swagelok)			3				3	SS-400-9
	1/2" Union (Swagelok)					2		2	SS-810-9
Tee - Junctions	KF-16							0	
	KF-25	2	2					4	
	KF-40				3			3	2(40-25-40)
	1/2" Union (Swagelok)					2		2	SS-810-3
	DN-100(100-25-100)	1						1	
	1/4" SL			3				3	
	1/2" SL							0	
Cross - Junctions	KF-16							0	
	KF-25							0	
	KF-40	1						1	40-40-25-25
	DN-100	1						1	100-100-100-40
	1/4" Union (Swagelok)			1				1	SS-400-4
Valve(A) ON-OFF	KF-16							0	
	KF-25	2	1					3	
	KF-40	1			1			2	
	DN-100(STRAIGHT)	1						1	
	1/4" SL (Swagelok)			3				3	SS-4H-1C
Valve(St) manual	KF-25				1			1	
	1/2" (Swagelok)					1		1	SS-18RS8

Union nipple	KF-16		2					2	
	KF-25		2		1			3	
	KF-40		1					1	
	DN-100	2						2	1x 2.0m, 1x0.3m
Centre ring with holder	KF-16		6					6	
	KF-25	11	20		5			36	
	KF-40	3			9			12	
	DN-100							0	
Clamp	KF-16		6					6	
	KF-25	11	20		5			36	
	KF-40	3			9			12	
	DN-100 (bolts+Clamp Pairs)	80						80	
Hose	3/8"		5	5				10	4X0.3MX 1/4"MVCR-kf25, 1Xkf10-kf25
									1x 0.5mX T-KF25,1x 0.7mx T-1/4"MNPT
									1x 0.8m, 1x 1.0m, 1x 2.0m
	KF-16		4					4	4x1.0 m
	KF-25	2	10		1			13	9x 0.8m, 4x 0.9m,
	KF-40		1		2			3	2x 0.4m, 1x 2.0m,
Blank Off	KF-16		2					2	
	KF-25	1	2		1			4	
	KF-40				3			3	
	DN-100	1						1	
Instruments / Sp Connector	1/2"F-1/2"F-1/4"FNPT (Swagelok)					1		1	SS-810-3-4TTF
	1/4"MVCR-1/4"Ferrule (Swagelok)			2				2	SS-4-VCR-6-400
	Pressure Gauge (-14.7-0-5 psig)					1 (P7)		1	
	He-3 MFM (500µmol/s), (Aalborg make)			1				1	GFM17S-BCL6-B0
	12 nos pm connector, SMC						2	2	
	150m 4mm PU tube						1	1	
	10mm water panel connector						2	2	
	Inline tee (water)						2	2	
	0.2 micron dust filtre (KF-25, 90^0)		1					1	
	1/2" tube to kf25 nipple elbow					1		1	
	1/4" SW union (Panel), Swagelok			1				1	SS-400-61
	back pressure regulator (Swagelok)		2	1				3	KBP1C0AXA30000
	1/4" fnpt to tube, Swagelok			1				1	SS-400-7-4

	1/4" SW blind PLUG, Swagelok			1				1	SS-400-P
	Flow control valve (VAT)		1					1	21120-KA01-0002
	Vacuum Pressure Gauge	1	3	1	1			6	IUAC supply
Valve On-Off (EP)	KF25		12					12	
	KF 40		2						

3.7. **GMS rack assembly**

GMS rack assembly (Figure-10) is a custom built stand for all the components including the heavy vacuum equipment (turbo and rotary pumps). Its skeletal support is made of 40mm x 40 mm aluminium prefabricated channels with suitable plastic caps at the ends. There are 4 racks inside this panel which will support the heavy pumps. These supports plates are to be made with 10 mm thick aluminium plates, machined to hold the pumps with suitable holes. The side plates (4 no) are to be made of 3mm MS channel with suitable powder coating.

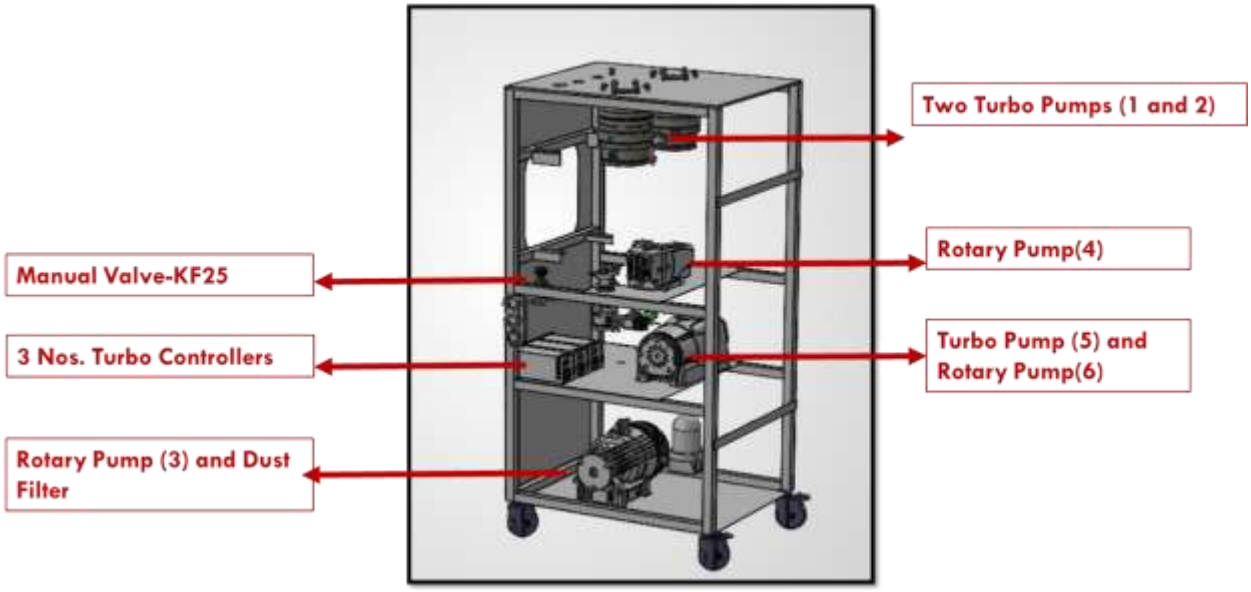

Figure 10: 19'' rack assembly with pumps and controllers.

3.8 Rack Integration and Final Assembly

All GMS sub-assemblies shall be integrated into a 19-inch custom equipment rack. The rack shall provide adequate mechanical support and shall be suitably arranged to allow convenient operation, inspection, maintenance and replacement of individual components. The final rack assembly shall include:

- All GMS sub-assemblies.

- Interconnecting vacuum/gas lines.
- Valves and gauges.
- Flow meters and regulators.
- Helium storage tanks, where applicable to the rack arrangement.
- Required supports and mounting hardware.
- Interfaces for connection to the vacuum pumps provided by the purchaser.

The supplier shall assemble and route the system in accordance with the approved GMS flow diagram and final assembly drawing. The vacuum pumps specified/provided by the purchaser shall be integrated with the GMS by the supplier during final assembly and testing. The final arrangement shall maintain clear access to valves, gauges, regulators and other operational components. The pump assembly into the rack is as given in Figure 10.

3.9 Testing

Each sub-assembly shall be completely assembled and tested independently before integration into the final GMS in presence of IUAC personnel (on site or remote). The supplier shall maintain test records for each sub-assembly and submit them at the time of delivery. All helium leak testing should be below 10^{-8} mbar.l/s of pumping rate in Helium MSLD. The individual testing shall include, as applicable:

1. Dimensional inspection.
2. Visual and workmanship inspection.
3. Verification of material and component specifications.
4. Valve functional testing.
5. Gauge and instrumentation verification.
6. Regulator testing.
7. Flow-meter verification.
8. Pressure testing.
9. Vacuum leak testing.

After integration of all sub-assemblies into the rack and connection to the vacuum pumps provided by the purchaser, the complete GMS shall undergo final testing. The final assembly shall be evacuated and subjected to a helium leak test, the same as the sub-assemblies. Any leak detected above the specified acceptance criterion shall be rectified by the supplier, and the system shall be retested until the specified acceptance criterion is achieved. All the open ends shall be blanked off with necessary fittings.

Final acceptance of the GMS shall be based on:

- Successful completion of individual sub-assembly tests.
- Successful integration into the rack.
- Successful functional testing of valves, gauges, regulators and flow meters.
- Successful integration with the purchaser-provided vacuum pumps.
- Successful final helium leak test.
- Submission of all required test and inspection reports.

- Submission of final as-built drawings and component documentation.

4.0 Documentation

The supplier shall provide the following documentation along with the completed GMS:

1. Overall GMS assembly drawing and solid models.
2. System flow diagram.
3. Individual sub-assembly drawings (pdf and step files).
4. Final rack layout/drawing.
5. Bill of Requirements with final supplied part numbers.
6. Datasheets for all major components.
7. Material certificates, wherever applicable.
8. Calibration certificates for pressure gauges and flow meters, wherever applicable.
9. Individual sub-assembly test reports.
10. Final system leak-test report.
11. Valve/regulator functional test records.
12. As-built drawings reflecting any changes made during fabrication.
13. Operation and maintenance documentation for proprietary components.

All drawings shall clearly indicate dimensions, connection sizes, component identification numbers and interfaces required for integration with the Dry Dilution Refrigerator.

4.1 Welding

All SS welding carried out under the ambit of this job must be helium leak tight to a level $\leq$1e-8 torr lt/s. Where ever possible the pipe joints should be welded using orbital welding machine which improves the quality of the weld and it will have to be documented for future reference.

ANNEXURE-B: Terms & Conditions

TENDER ACCEPTANCE LETTER
(To be given on Company Letter Head)

Date:

To,
The Director
IUAC, New Delhi-67

Sub: Acceptance of Terms & Conditions of Tender.

Name of Tender / Work: -

Dear Sir,
I/ We have downloaded / read and examined the tender document(s) for the above-mentioned Tender /Work from the web site(s) namely:

_____

as per your advertisement, given in the above-mentioned website(s).

1. I / We hereby certify that I / we have read the entire terms and conditions of the tender documents (including all documents like annexure(s), schedule(s), etc.,), which form part of the contract agreement and I / we shall abide hereby by the terms / conditions / clauses contained therein.
2. The corrigendum(s) issued from time to time by your department/ organization too have also been taken into consideration, while submitting this acceptance letter.
3. I / We hereby unconditionally accept the tender conditions of above-mentioned tender document(s) / corrigendum(s) in its totality / entirety.
4. I / We do hereby declare that our Firm has not been blacklisted/ debarred by any Govt. Department/Public sector undertaking.
5. I / We certify that all information furnished by our Firm is true & correct and, in the event, that the information is found to be incorrect/untrue or found violated, then your department/ organization shall without giving any notice or reason therefore or summarily reject the bid or terminate the contract, without prejudice to any other rights or remedy.

Yours Faithfully,

(Signature of the Bidder, with Official Seal)

Annexure C

DECLARATION OF LOCAL CONTENT

(To be given on Company Letter Head and self-certified– For tender value below Rs.10 Crores)
(To be given by Statutory Auditor/ Cost Auditor/ Cost Accountant/ CA for tender value above Rs.10 Crores)

To,
The Director,
Inter University Accelerator Centre
Aruna Asaf Ali Marg, New Delhi- 110 067

Subject: - Declaration of Local Content

Tender Reference No: _____

Name of Tender/ Work:

1. Country of Origin of Goods being offered: _____

2. We hereby declare that items offered has _____% local content

3. Details of the Location at which the Local Value Addition is made_____

4. Details of Local Content

"Local Content" means the amount of value added in India which shall, unless otherwise prescribed by the Nodal Ministry, be the total value of the item procured (excluding net domestic indirect taxes) minus the value of the imported content in the item (including all customs duties) as a proportion of the total value, in percent.

Bidders offering Imported products will fall under the category of Non-Local Suppliers. They cannot claim themselves as Class-I or Class –II Local Suppliers by claiming the services such as Transportation, Insurance, Installation, Commissioning, Training and After Sale Service Support like AMC/ CMC etc. as Local Value Addition.

"*False declaration will be in breach of Code of Integrity under Rule 175(1)(i)(h) of the General Financial Rules for which a bidder or its successors can be debarred for up to two years as per Rule 151(iii) of the General Financial Rules along with such other actions as may be permissible under law."

Yours faithfully,

(Signature of the bidder, with Official Seal)

Note: Preference shall be given to local suppliers as per revised Public Procurement (Preference to Make in India), Order 2017, No. P-45021/2/2017-PP (B.E-II) dated 16.09.2020 issued by DPIIT, Ministry of Commerce and Industry, Govt. of India. (Submit duly filled Declaration of Local Content for the same). The Declaration once submitted in the Technical Bid will be final. Submission of Revised Declaration will NOT be accepted.

Annexure D
PROFILE OF THE TENDERER

(To be given on Company Letter Head)

1. Name of the Firm / Organization:

2. Address:

3. Telephone No. / Mobile No. & Name of the Contact Person:
5. E-mail ID:
6. Month and Year of establishment:

7. Name of proprietor / partners/director:

8. No. of years of experience in this field, with Reference, Certificates:

9. PAN number:

10. GST Registration No.

Signature of the Tenderer &Seal

Annexure E: BOQ/PRICE BID

(Price shall be quoted in the BOQ /Price Bid section only, which is given separately)

Tender Inviting Authority: INTER UNIVERSITY ACCELERATOR CENTRE

Name of Work: **Supply of Gas Management System (GMS) for Dilution Refrigerator as mentioned in Annexure A**

Tender Number: IUAC/NIT/15/HS/2026-27

Name of Bidder: _____

Sr. no.	Supply of Gas Management System (GMS) for Dilution Refrigerator as mentioned in Annexure A	Quantity Required	Unit Price	Total price
1.	Design, Drawing, supply, assembly, testing and transportation of the gas management panel (GMP) as per detailed terms and condition laid out in Appendix-A	1 lot		
2.	Charges such as Packing, Transportation, Insurance etc.			
3.	GST (if any)			
Total Price (INR) in Figures*				
Total Price (INR) in words*				

*Any deviation in cost mentioned in Figures and words then cost mentioned in word will be considered.

**The items mentioned in point 1 will alone be considered for arriving L1 Bidder.

Name & Signature of Tenderer

Company with Seal

Annexure F: List of Documents to be attached

S.No.	Description	Supporting Documents required	Attached (YES/ NO)
1.	The Bidder shall be registered for at least 5 years as on 15.07.2025	Certificate of registration/Incorporation	
2.	Bidder should have executed at least one complete vacuum component & custom built integration order to research laboratories / organization of National and three elsewhere in the recent years.	Purchase orders as per NIT	
3.	Copies of purchase orders and corresponding work completion certificates supporting manufacturing experience in vacuum components completed during last 5 years		
4.	Copies of latest P.Os. and the user contact details should be provided.		
5.	Bidder should attach Copies of the previous 3 FY [2022-23, 2023-24 & 2024-25] Income Tax Returns	Attach ITR copies	
6.	The Bidder must have an average Annual turnover of 5 Cr. of the bid value during the last 3 financial years.	Audited reports	
7.	Bidder should not have been blacklisted for the last 3 years from any Central/State Govt. and PSU.	Undertaking on Letterhead	
8.	All the terms & conditions in the Complete bid document are acceptable.		
9.	Bid Validity (180 days after the date of bid opening).		
10.	Warranty of one year from installation, commissioning & date of acceptance.		
11.	Bidder information form **Annexure- D**		
12.	Price bid as per **Annexure – E**		
13.	Agree to submit Performance Security 5% of P.O. value after the award of the contract		
14.	Contact details & Supply details **Annexure - G**		
15.	Signed Integrity Pact as per **Annexure - H**		
16.	Compliance Form as per **Annexure-I**		
17.	Bid security form as per **Annexure- J**	Undertaking on letterhead	

Annexure - G
Contact details of the Buyers

Sr. No	List of similar vacuum equipment / systems supplied & serviced in the past 3 years	Address, Telephone Nos., Fax No. And the e-mail address of the Buyer

Signature and Seal of the manufacturer/Bidder.....

Place:

Date:

Annexure H

INTEGRITY PACT

(To be executed on plain paper and submitted along with technical bid/tender documents. To be signed by the bidder and IUAC.)

Inter-University Accelerator Centre, (IUAC) hereinafter referred to as "The Principal".

AND

_____hereinafter referred to as "The Bidder/Contractor"

PREAMBLE

The Principal intends to award, under laid down organizational procedures, contract/s for _____. The Principal values full compliance with all relevant laws of the land, rules, regulations, economic use of and of fairness/transparency in its relations with its Bidder(s) and/or Contractor(s).

In order to achieve these goals, the Principal will appoint an Independent External Monitor (IEM), who will monitor the tender process and the execution of the contract for compliance with the principles mentioned above.

Action 1 – Commitments of the Principal.

1. The Principal commits itself to take all measures necessary to prevent corruption and to observe the following principles: -

a) No employee of the Principal, personally or through family members, will in connection with the tender for, or the execution of a contract, demand, take a promise for or accept, for self or third person, any material or immaterial benefit which the personal is not legally entitled.

b) The Principal will during the tender process treat all Bidder(s) with equity and reason. The Principal will in particular, before and during the tender process, provide to all Bidder(s) the same information and will not provide to any Bidder(s) confidential/additional information through which the Bidder(s) could obtain an advantage in relation to the process or the contract execution.

c) The Principal will exclude from the process all known prejudiced persons.

2. If the Principal obtains information on the conduct of any of its employees which is a criminal offence under the IPC/PC Act, or if there be a substantive suspicion in this regard, the Principal will inform the Chief Vigilance Officer and in addition can initiate disciplinary actions.

Section 2 – Commitments of the Bidder(s)/Contractor(s)

1. The Bidder(s)/Contractor(s) commit himself to take all measures necessary to prevent corruption. He commits himself to observe the following principles during his participation in the tender process and during the contract execution.

a. The Bidder(s)/contractor(s) will not, directly or through any other persons or firm, offer promise or give to any of the Principal's employees involved in the tender process or the execution of the contract or to any third person any material or other benefit which he/she is not legally entitled to, in order to obtain in exchange any advantage or during the execution of the contract.

b. The Bidder(s)/Contractor(s) will not enter with other Bidders into any undisclosed agreement or understanding, whether formal or informal. This applies in particular to prices, specifications, certifications, subsidiary contracts, submission or non-submission of bids or any other actions to restrict competitiveness or to introduce cartelization in the bidding process.

c. The Bidder(s)/Contractor(s) will not commit any offence under the relevant IPC/PC Act; further the Bidder(s)/Contractors will not use improperly, for purposes of competition or personal gain, or pass on to others, any information or documents provided by the Principal as part of the business relationship, regarding plans, technical proposals and business details, including information contained or transmitted electronically.

d. The Bidder(s)/Contractor(s) of foreign origin shall disclose the name and address of the Agents/representatives in India, if any. Similarly, the bidder(s)/contractor(s) of Indian Nationality shall furnish the name and address of the foreign principals, if any. All the payments made to the India agent/representative have to be in Indian Rupees only.

e. The Bidder(s)/Contractor(s) will, when presenting his bid, disclose any and all payments he has made, is committed to or intends to make to agents, brokers or any other intermediaries in connection with the award of the contract.

f. The Bidder(s)/Contractor (s) who have signed the Integrity Pact shall not approach the courts while representing the matter to IEMs and shall wait for their decision on the matter.

2. The Bidder(s)/Contractor(s) will not instigate third persons to commit offences outlined above or be an accessory to such offences.

Section 3: Disqualification from tender process and exclusion from future contract

If the Bidder(s)/Contractor(s), before award or during execution has committed a transgression through a violation of Section 2 above or in any other form such as to put his reliability or credibility in question, the Principal is entitled to disqualify the Bidder(s)/Contractor(s) from the tender process or to terminate the contract, if already signed, for such reasons.

Section 4: Compensation for Damages

1. If the Principal has disqualified the Bidder(s) from the tender process prior to the award according to Section 3, the Principal is entitled to demand and recover the damages equivalent to Earnest Money Deposit/Bid Security.

2. If the Principal has terminated the contract according to Section3, or if the Principal is entitled to terminate the contract according to Section3, The Principal shall be entitled to demand and recover from the Contractor liquidated damages of the Contract value or the amount equivalent to Performance Bank Guarantee.

Section 5: Previous Transgression

1. The Bidder declares that no previous transgressions occurred in the last three years with any other company in any country conforming to the TII's anti-corruption approach or with any other public sector enterprise in India that could justify his exclusion from the tender process.

2. If the bidder makes incorrect statement on this subject, he can be disqualified from the tender process and appropriate action can be taken including termination of the contract, if already awarded, for such reason.

Section 6: Equal treatment of all Bidders / Contractors / Sub -contractors.

1. In case of sub –contracting, the Principal Contractor shall take the responsibility of adoption of Integrity Pact by the Sub – Contractor.

2. The Principal will enter into agreements with the identical conditions as this one with all bidders and Contractors.

3. The Principal will disqualify from the tender process all bidders who do not sign this Pact or violate its provisions.

Section 7: Criminal charges against violation Bidder(s) / Contractor(s) / Sub-contractors(s).

If the Principal obtains knowledge of conduct of a Bidder(s)/ Contractor(s) which constitutes corruption, or if the Principal has substantive suspicion in this regard, the Principal will inform the same to the Chief Vigilance Officer.

Section 8: Independent External Monitor/Monitors

1. The Principal appoints competent and credible Independent External Monitor for this Pact after approval of Central Vigilance Commission. The task of the Monitor is to review independently and objectively, whether and to what extent the parties comply with the obligations under this agreement.

2. The Monitor is not subject to instructions by the representatives of the parties and performs his functions neutrally and independently. The Monitor will have access to all contract documents, whenever required. It will be obligatory for him to treat the information and documents of bidders /contractors as confidential. He reports to the Director, IUAC.

3. The Bidder(s)/Contractor(s) accepts that the Monitor has the right to access without restriction to all project documentation of the Principal including that provided by the Contractor. The Contractor will also grant the Monitor, upon his request and demonstration of a valid interest, unrestricted and unconditional access to his project documentation. The same is applicable to Subcontractors.

4. The Monitor is under contractual obligation to treat the information and documents of the Bidder(s)/Contractor(s)/Subcontractor(s) with confidentiality. The Monitor has also signed declarations on "Non – Disclosure of Confidential Information" and of "Absence of Conflict of Interest" In case of any conflict of interest arising at a later date, the IEM shall inform Director, IUAC and recuse himself/herself from the case.

5. The Principal will provide to the Monitor sufficient information about all meetings among the parties related to the Project provided such meetings could have an impact on the contractual relations between the Principal and the Contractor. The parties offer to the Monitor the option to participate in such meetings.

6. As soon as the Monitor notices, or believes to notice, a violation of this agreement, he will so inform the Management of the Principal and request the Management to discontinue or take corrective action, or to take other relevant action. The monitor can in this regard submit non-binding recommendations. Beyond this, the Monitor has no right to demand from the parties that they act in a specific manner, refrain from action or tolerate action.

7. The Monitor will submit a written report to the Director, IUAC within 8 to 10 weeks from the date of reference or intimation to him by the Principal and, should the occasion arise, submit proposals for correcting problematic situations.

8. If the Monitor has reported to the Director, IUAC, a substantiated suspicion of an offence under relevant IPC/PC Act, and the Director, IUAC has not, within the reasonable time taken visible action to proceed against such offence or reported it to the Chief Vigilance Officer, the Monitor may also transmit this information directly to the Central Vigilance Commissioner.

9. The word "Monitor" word includes both singular and plural.

Section 9: Pact Duration

This pact begins when both parties have legally signed it. It expires for the Contractor 12 months after the last payment under the contract, and for all other Bidder 6 months after the contract has been awarded.

If any claim is made/lodged during this time, the same shall be binding and continue to be valid despite the lapse of this pact as specified above, unless it is discharged/determined by Director of IUAC.

Section 10: Other Provisions

- This agreement is subject to Indian Law. Place of performance and jurisdiction is the registered office of the principal i.e. in New Delhi
- Changes and supplements as well as termination notices need to be made in writing. Side agreements have not been made.
- If the contractor is a partnership or a consortium, this agreement must be signed by all partners or consortium members.
- Should one or several provisions of this agreement turn out to be invalid, the remainder of this agreement remains valid. In this case, the parties will strive to come to an agreement to their original intentions.
- Issues like Warranty/Guarantee etc. shall be outside the purview of the IEMs.
- In the event of any contradiction between the Integrity Pact and its Annexure, the clause in the Integrity Pact will prevail.

(For & on behalf of the Principal) (For & on behalf of Bidder/Contractor)

(Office Seal) (Office Seal)

Place_____ Date_

Annexure – I (Compliance sheet)

C.	**Document to be submitted along with techno commercial bid**	**Yes/No**
1.	Details of qualified welders along with valid welder qualification certificates.	
2.	Details of qualified manpower (Name, education qualification, work experience) for drawing preparation, manufacturing, welding, and testing activities required for the scope of work specified herein.	
3.	If any portion of the work is proposed to be subcontracted, a consent letter from the subcontractor clearly defining the scope of subcontracted work shall be submitted.	
4.	Details of clean room are available for assembly and testing activities.	
5.	A list of licensed software proposed to be used for drawing preparation.	
6.	A test report of components qualified through ultimate vacuum testing, demonstrating achievement of vacuum level better than 1E-06 mbar.	
7.	Claim that the vendor has supplied vacuum valves to user with end user certificate	
8.	All documents required as per annexure-F	

Annexure-J

BID SECURING DECLARATION FORM

(TO BE SUBMITED BY MSME ONLY ON COMPANY LETTER HEAD)

Tender No.: Date:

To
The Director
Inter University Accelerator Centre (IUAC), New Delhi
Dear Sir/Madam,

We, the undersigned, solemnly declare that:

We understand that, according to the conditions of this Tender Document, the bid must be supported by a Bid Securing Declaration In lieu of Bid Security.

We unconditionally accept the condition of this Bid Securing Declaration. We understand that we shall stand automatically suspended from being eligible for bidding in any tender in IUAC for a period of two years from the date of opening of this bid if we breach our obligation under the tender conditions, if, we,

1) withdraw/amend/impair/derogate, in any respect, from our bid, within the bid validity; or
2) being notified within the bid validity of the acceptance of our bid by IUAC

(i) fail or refuse to sign the contract, or
(ii) failed or refused to produce the original documents for scrutiny or the required Performance Security within the stipulated time under the conditions of the tender documents.

We know that this Bid Securing Declaration shall expire if the contract is not awarded to us, upon:

1) receipt by us of your notification
   a) of cancellation of the entire tender process or rejection of all bids or
   b) of the name of successful bidder or

2) Forty-five days after the expiration of the bid validity or any extension to it.

Signed:

Name:

Dated on _____ day of _____

Corporate Seal (where appropriate)

(Note: In case of a Joint Venture, the Bid Securing Declaration must be in the name of all partners to the Joint Venture that submits the bid)